# DETAIL & SECTION OF ROAD
# PAVEMENT AND DRAINAGE

TMBP-SP001-CS-DET-103

NOTES :

| DRAWING REFERENCE | DESCRIPTION | REV | DATE | DESCRIPTION | PREPR'D | CHECK'D | APRV'D | CHECKED | APPROVED |
|---|---|---|---|---|---|---|---|---|---|
| | | A1 | 13/01/2026 | ISSUED FOR REVIEW | | | | | |
| | | A | 09/01/2026 | ISSUED FOR REVIEW | NAS | AS | MR | YR | MRZ/RS |

PT. PERTAMINA EP APPROVAL

PROCET :

JASA PEMBANGUNAN FASILITAS PRODUKSI STASIUN PENGUMPUL (SP)
TANJUNG MIRING BARAT & KARANGAN TIMUR

OWNER :

skkmigas PERTAMINA EP

CONTRACTOR :

POG

| SCALE : | DRAWING NO. | SHEET. NO. | REV |
|---|---|---|---|
| NTS | TMBP-SP001-CS-DET-103 | 1 OF 2 | A1 |

DRAWING TITLE :

DETAIL & SECTION OF ROAD
PAVEMENT AND DRAINAGE

# ARRANGEMENT OF JOINT FOR ROAD

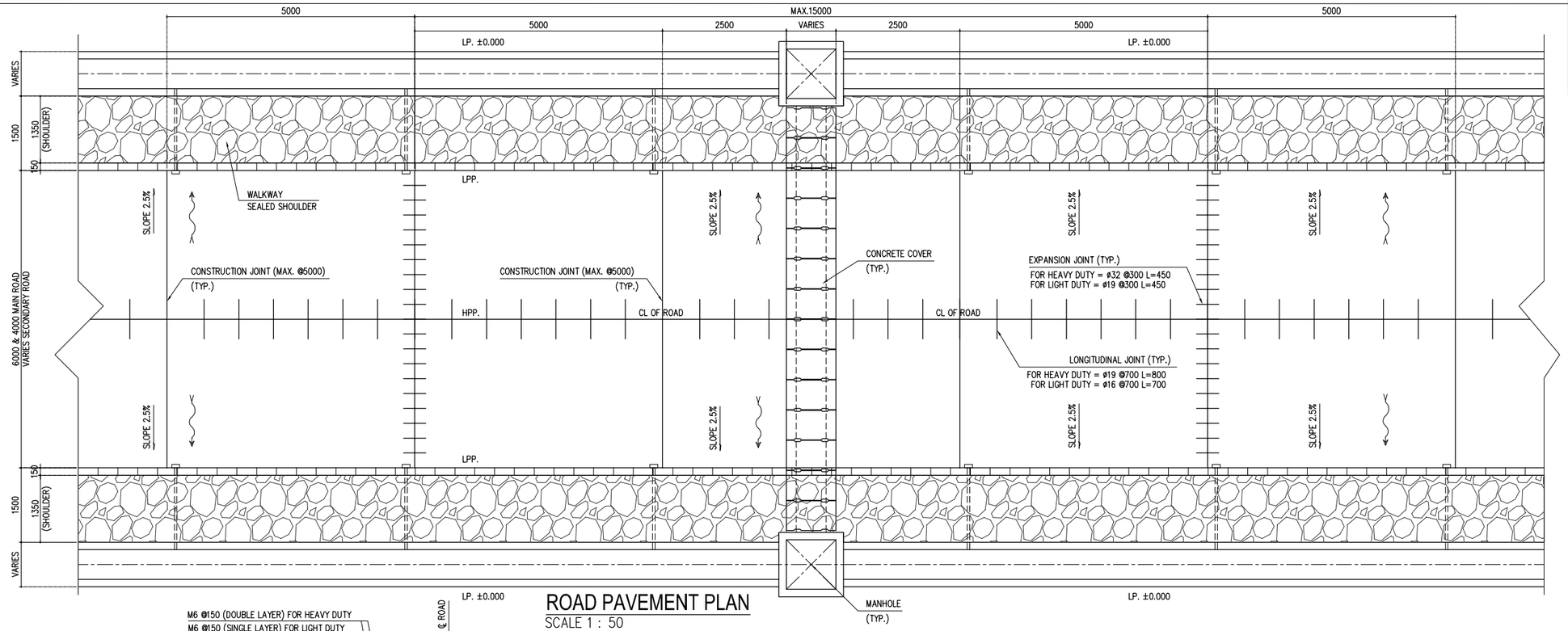


## ROAD PAVEMENT PLAN

SCALE 1 : 50

## CATATAN

NOTE :

1. ALL DIMENSIONS ARE IN MILIMETERS, ELEVATION AND COORDINATE ARE IN METERS UNLESS OTHERWISE NOTED.
2. FOR OTHER NOTES SEE DWG. NO. TMBP-SP001-CS-LAY-D103

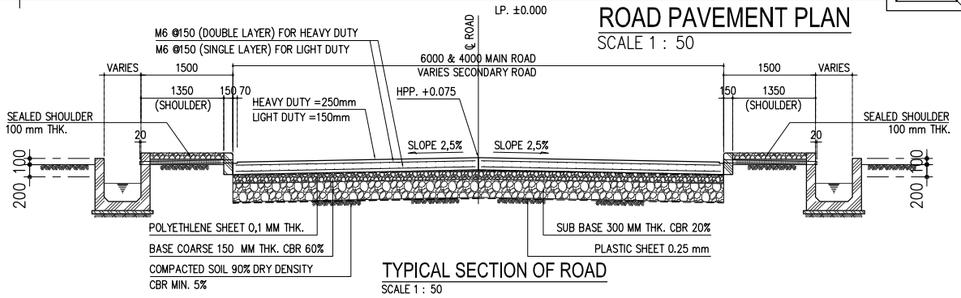


## TYPICAL SECTION OF ROAD

SCALE 1 : 50

## TYPICAL DETAIL CULVERT

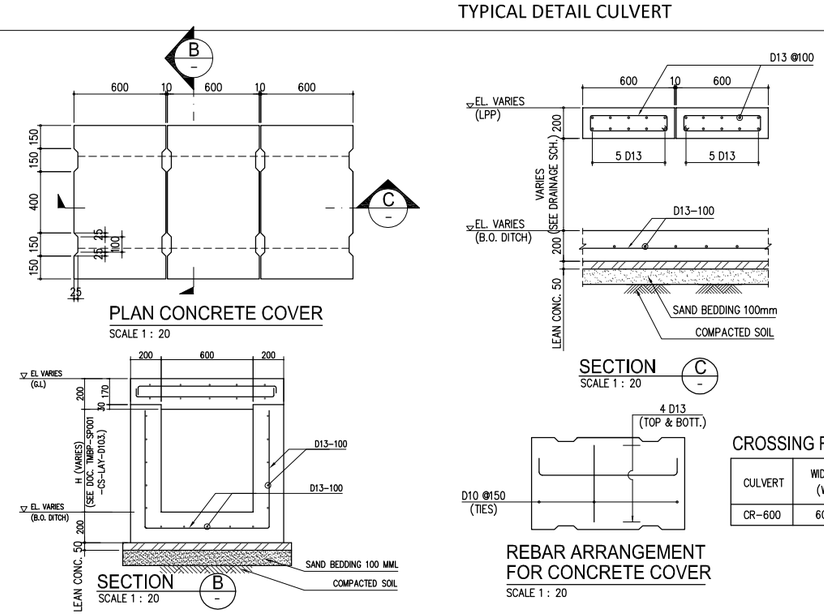


PLAN CONCRETE COVER

SCALE 1 : 20

SECTION C

SCALE 1 : 20

SECTION B

SCALE 1 : 20

REBAR ARRANGEMENT FOR CONCRETE COVER

SCALE 1 : 20

## CROSSING ROAD SCHEDULE

| CULVERT | WIDTH (W) | WALL THICKNESS (t1) | SLAB THICKNESS (t2) | REBAR OF WALL | REBAR OF SLAB |
|---|---|---|---|---|---|
| CR-600 | 600 | 200 | 200 | D13-100 | D13-100 |

## TYPICAL DETAIL MANHOLE

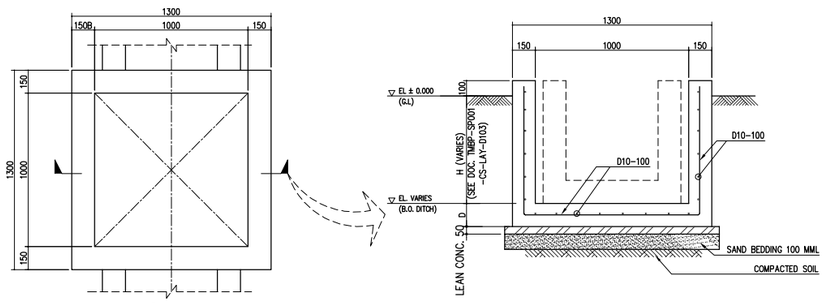


MANHOLE PLAN

SCALE 1 : 20

NOTES :

1. BEFORE STARTING CONSTRUCTION, CONTRACTOR SHALL VERIFY ACTUAL FIELD CONDITION AND DETERMINE LOCATION, ELEVATION OF EXISTING GRADING AND OTHER STRUCTURE. THE CONTRACTOR SHALL TAKE NECESSARY MEASURES TO HOLD SAFE AND PREVENT DAMAGE TO ANY EXISTING FACILITIES.

| DRAWING REFERENCE | DESCRIPTION | REV | DATE | DESCRIPTION | PREPR'D | CHECK'D | APRV'D | CHECKED | APPROVED |
|---|---|---|---|---|---|---|---|---|---|
| | | A1 | 13/01/2026 | ISSUED FOR REVIEW | | | | | |
| TMBP-SP001-PI-PLP-101 | OVERALL PLOT PLAN DRAWING | A | 09/01/2026 | ISSUED FOR REVIEW | NAS | AS | MR | YR | MRZ/RS |

PT. PERTAMINA EP APPROVAL

PROCET :

JASA PEMBANGUNAN FASILITAS PRODUKSI STASIUN PENGUMPUL (SP) TANJUNG MIRING BARAT & KARANGAN TIMUR

OWNER :

skkmigas PERTAMINA EP

CONTRACTOR :

POG

| SCALE : | DRAWING NO. | SHEET. NO. | REV |
|---|---|---|---|
| 1 : 50, 1 : 20 | TMBP-SP001-CS-DET-103 | 2 OF 2 | A1 |

DRAWING TITLE :

DETAIL & SECTION OF ROAD PAVEMENT AND DRAINAGE